Idaho High School Activities Association

2009 State Volleyball

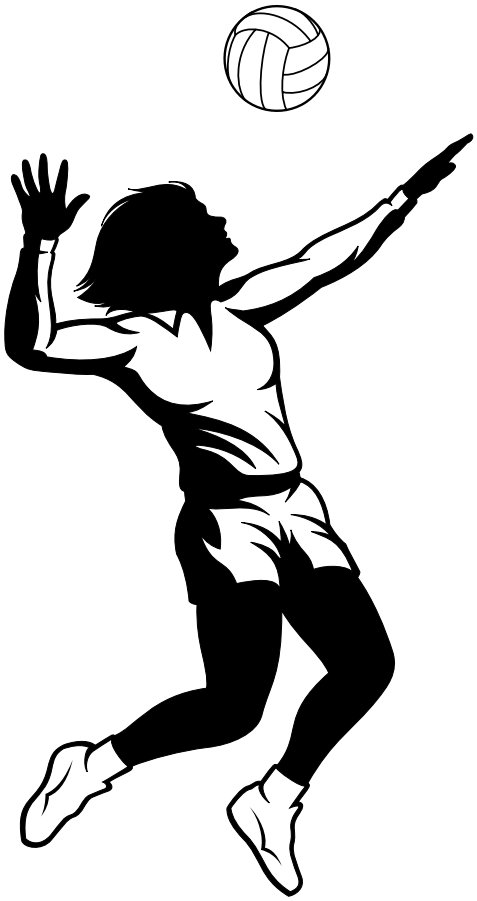

Tournament Manual

United Dairymen of Idaho
Official Sponsor of
IHSAA State Championship Events

2009– 2010 State Tournament Host Hotels

The following hotels have agreed to serve as the 2009-2010 State Tournament Host Hotels by providing complimentary rooms for tournament officials. We appreciate their generous support and urge member schools to patronize these Partners in Youth Development.

SOCCER	**October 22 – 24**	
Cambria Suites	2970 W Elder St, Boise	208-344-7444
Country Inns & Suites	3355 E Pine Ave, Meridian	208-639-3300
Fairfield Inn & Suites, Nampa	6150 N Midland Blvd, Nampa	208-467-5888
Hyatt Place	925 N Milwaukee, Boise	208-375-1200
Mr Sandman Inn & Suites, Meridian	1575 S Meridian Rd, Meridian	208-887-2062
Oxford Suites	1426 S Entertainment Ave, Boise	208-322-8000
Rodeway Inn	1115 N Curtis Rd, Boise	208-376-2700
TownePlace Suites, Meridian	1415 S Eagle Rd, Meridian	208-884-8550

VOLLEYBALL	**October 30 – 31**	
Coeur d'Alene Inn (Best Western)	506 W Appleway, Coeur d'Alene	208-765-3200
Holiday Inn Express, Lewiston	2425 Nez Perce Dr, Lewiston	208-750-1600
Red Lion Hotel, Lewiston	621 21st St, Lewiston	208-748-1000
Red Lion Templin's	414 E First Ave, Post Falls	208-773-1611
Shilo Inn, Coeur d'Alene	702 W Appleway, Coeur d'Alene	208-664-2300

CROSS COUNTRY	**October 31**	
Hampton Inn & Suites, Coeur d'Alene	1500 Riverstone Dr, Coeur d'Alene	208-769-7900

FOOTBALL	**November 20 – 21**	
DoubleTree Club Hotel	475 W Park Center Blvd, Boise	208-345-2002
Holiday Inn	3300 Vista Ave, Boise	208-344-8365
Pocatello Convention & Visitors' Bureau		208-235-7659

Pocatello area hotels have agreed to share in providing rooms for IHSAA officials. For accommodations at tournament rates contact the Convention and Visitors' Bureau.

Red Lion Hotel, Lewiston	621 21st St, Lewiston	208-748-1000
SpringHill Suites, Park Center	424 E Park Center Blvd, Boise	208-342-1044

DRAMA	**December 4 – 5**	
Comfort Inn, Idaho Falls	195 S Colorado Ave, Idaho Falls	208-528-2804

GIRLS BASKETBALL	**February 18 – 20**	
Courtyard by Marriott, Meridian	1789 S Eagle Rd, Meridian	208-888-0800
Hampton Inn & Suites, Meridian	875 S Allen St, Meridian	208-887-3600
Harrison Plaza Suites	409 S Cole Rd, Boise	208-375-7666
Holiday Inn	3300 Vista Ave, Boise	208-344-8365
Holiday Inn Express, Boise	2613 S Vista Ave, Boise	208-388-0800
Shilo Inns & Resorts		
Nampa Suites	1401 Shilo Dr, Nampa	208-465-3250
Nampa Blvd	617 Nampa Blvd, Nampa	208-466-8993
Sleep Inn, Nampa	1315 Industrial Rd, Nampa	208-463-6300
SpringHill Suites, Boise	6325 N Cloverdale Rd, Boise	208-939-8266

WRESTLING	**February 26 – 27**	
Pocatello Convention & Visitors' Bureau		208-235-7659

Pocatello area hotels have agreed to share in providing rooms for IHSAA officials. For accommodations at tournament rates contact the Convention and Visitors' Bureau.

BOYS BASKETBALL	**March 4 – 6**	
Courtyard by Marriott, Meridian	1789 S Eagle Rd, Meridian	208-888-0800
Hampton Inn & Suites, Meridian	875 S Allen St, Meridian	208-887-3600
Harrison Plaza Suites	409 S Cole Rd, Boise	208-375-7666
Holiday Inn	3300 Vista Ave, Boise	208-344-8365
Holiday Inn Express, Boise	2613 S Vista Ave, Boise	208-388-0800
Shilo Inns & Resorts		
Nampa Suites	1401 Shilo Dr, Nampa	208-465-3250
Nampa Blvd	617 Nampa Blvd, Nampa	208-466-8993
Sleep Inn, Nampa	1315 Industrial Rd, Nampa	208-463-6300
SpringHill Suites, Boise	6325 N Cloverdale Rd, Boise	208-939-8266
DEBATE	**March 12 – 13**	
Best Western Caldwell Inn & Suites, Caldwell	908 Specht, Caldwell	208-454-7225
SPEECH	**April 16 – 17**	
Pocatello Convention & Visitors' Bureau		208-235-7659
GOLF	**May 17 – 18**	
Coeur d'Alene Inn (Best Western)	506 W Appleway, Coeur d'Alene	208-765-3200
Holiday Inn Express, Lewiston	2425 Nez Perce Dr, Lewiston	208-750-1600
Red Lion Hotel, Lewiston	621 21st St, Lewiston	208-748-1000
Shilo Inn, Coeur d'Alene	702 W Appleway, Coeur d'Alene	208-664-2300
SOFTBALL	**May 20 – 22**	
Best Western Caldwell Inn & Suites, Caldwell	908 Specht, Caldwell	208-454-7225
Coeur d'Alene Inn (Best Western)	506 W Appleway, Coeur d'Alene	208-765-3200
Hampton Inn & Suites, Nampa	5750 Franklin Rd, Nampa	208-442-0036
Pocatello Convention & Visitors' Bureau		208-235-7659
Shilo Inns & Resorts, Twin Falls	1586 N Blue Lakes Blvd, Twin Falls	208-733-7545
TRACK	**May 20 – 22**	
DoubleTree Club Hotel	475 W Park Center Blvd, Boise	208-345-2002
Grove Hotel, Boise	245 S Capitol Blvd, Boise	208-472-3363
Hampton Inn & Suites, Boise/Downtown	495 S Capitol Blvd, Boise	208-331-1900
Residence Inn by Marriott	1401 Lusk Ave, Boise	208-344-1200
SpringHill Suites, Park Center	424 E Park Center Blvd, Boise	208-342-1044
TENNIS	**May 21 – 22**	
Best Western Caldwell Inn & Suites, Caldwell	908 Specht, Caldwell	208-454-7225
Cambria Suites	2970 W Elder St, Boise	208-344-7444
Country Inns & Suites	3355 E Pine Ave, Meridian	208-639-3300
Courtyard by Marriott, Meridian	1789 S Eagle Rd, Meridian	208-888-0800
DoubleTree Club Hotel	475 W Park Center Blvd, Boise	208-345-2002
Fairfield Inn & Suites, Nampa	6150 N Midland Blvd, Nampa	208-467-5888
Grove Hotel, Boise	245 S Capitol Blvd, Boise	208-472-3363
Hampton Inn & Suites, Boise/Downtown	495 S Capitol Blvd, Boise	208-331-1900
Hampton Inn & Suites, Meridian	875 S Allen St, Meridian	208-887-3600
Hampton Inn & Suites, Nampa	5750 Franklin Rd, Nampa	208-442-0036
Harrison Plaza Suites	409 S Cole Rd, Boise	208-375-7666
Holiday Inn	3300 Vista Ave, Boise	208-344-8365
Holiday Inn Express, Boise	2613 S Vista Ave, Boise	208-388-0800
Hyatt Place	925 N Milwaukee, Boise	208-375-1200
Mr Sandman Inn & Suites, Meridian	1575 S Meridian Rd, Meridian	208-887-2062
Oxford Suites	1426 S Entertainment Ave, Boise	208-322-8000
Residence Inn by Marriott	1401 Lusk Ave, Boise	208-344-1200
Rodeway Inn	1115 N Curtis Rd, Boise	208-376-2700
Shilo Inns & Resorts		
Nampa Suites	1401 Shilo Dr, Nampa	208-465-3250
Nampa Blvd	617 Nampa Blvd, Nampa	208-466-8993
Sleep Inn, Nampa	1315 Industrial Rd, Nampa	208-463-6300
SpringHill Suites, Boise	6325 N Cloverdale Rd, Boise	208-939-8266
SpringHill Suites, Park Center	424 E Park Center Blvd, Boise	208-342-1044
TownePlace Suites, Meridian	1415 S Eagle Rd, Meridian	208-884-8550

Welcome

The Idaho High School Activities Association welcomes you to the 2009 State Volleyball Tournament. We appreciate your support of Idaho high school activities and hope the tournament will be an enjoyable, educational, and memorable experience for all players, coaches and fans. Good luck!

Table Of Contents

GENERAL INFORMATION

Admission - Public 4
Admission -Team Personnel 5
All-Tournament Teams 7
Awards 6
Crowd Control 5
District Play-Offs 7
Dressing Rooms 6
Hospitality Room 6
Host Hotels / Hotel Conduct 7
Lost and Found 6
Match Times 8
National Anthem 6
Number of Players 5
Official Rules 5
Official Volleyball 5
Pairings - 1A Pool Play 8
Pairings - 2A/1A 10
Parings - 5A/4A/3A 9
Past State Champions 11
Pep Bands, Cheerleaders, Student Sections. 5
Practice Between Games 6
Pre-Tournament Meetings 4
Pre-Tournament Practice 5
Programs 6
Protests 6
Representation 4
Rosters and Team Pictures 6
Sites/Managers 4
Sportsmanship Rules 5
Training Room/Towels 6
T-Shirts/Souvenir Merchandise 6
Warm-up Between Matches 6

MEDIA INFORMATION

Media Credentials/Admission 7
Broadcasting / Webcasting 7

OFFICIALS

Assignment 7
Line Judges 7
Official Scorer 7

Tournament Sites/Managers

5A* / 4A* / 3A*

Date:	October 30-31	Date:	October 30-31	Date:	October 30-31
Site:	Lake City High School	Site:	Post Falls High School	Site:	Coeur d'Alene High School
Mgr.:	Jim Winger	Mgr.:	Craig Christensen	Mgr.:	Todd Gilkey
	Lake City High School		Post Falls High School		Coeur d'Alene High School
	6101 Ramsey Road		PO Box 40 / 2832 E Poleline Rd		N 5530 4th St
	Coeur d'Alene 83815		Post Falls 83877		Coeur d'Alene 83814
Ph.:	769-0769	Ph.:	773-0581 ext 6314	Ph.:	667-4507

***Sites TBD after District play-ins**

2A		1A DI		1A DII	
Date:	October 30-31	Date:	October 30-31	Date:	October 30-31
Site:	Lakeland High School	Site:	Lewis-Clark State College	Site:	Lewiston High School
Mgr.:	Will Havercroft	Mgr.:	Michael Benke	Mgr.:	Tim Sperber
	Lakeland High School		Lewis-Clark State College		Lewiston High School
	PO Box 69 / 706 W Highway 53		500 8th Ave		1114 9th Ave
	Rathdrum 83858		Lewiston 83501		Lewiston 83501
Ph.:	687-0181	Ph.:	792-2366	Ph.:	748-3104

IHSAA Administrator: John Billetz, Executive Director
Ph.: 375-7027

Pre Tournament Meetings

It is important that each participating school is represented at the pre-tournament meeting as important tournament details will be reviewed. All meetings will be held on Thursday, October 29, time and placed to be announced.

2009 Representation

5A

Dist.	Rep.
I-II	2
III	4.5
V-VI	1.5

No 5A schools in D IV

4A

Dist.	Rep.
I-II	1
III	2.5
IV	2
V	1
VI	1.5

3A

Dist.	Rep.
I-II	2
III	1.5 + .5
IV	1.5
V	1
VI	1.5

2A

Dist.	Rep.
I-II	1
III	2
IV	1
V	2
VI	2

1A DI

Dist.	Rep.
I	.5
II	2.5
III	2.5
IV-V-VI	2.5

1A DII

Dist.	Rep.
I-II	2
III	1.5
IV	3
V-VI	1.5

Admission - Public

Tournament Pass - General	$20.00	Championship – General	$6.00
Tournament Pass - Discount*	$10.00	Championship – Discount	$4.00
General Admission	$ 5.00		
Discount Ticket*	$ 4.00		

*Senior Citizens, students in grades 7-12 with an activity card and students in grades 1-6 may purchase discount tickets and passes. Children under 6 admitted free.

Admission - Team Personnel

Head Coaches and **one assistant coach** of each school participating in the tournament will be issued a tournament pass. NOTE: The coach's regular IHSAA activity card will then be restricted to ONE ADMISSION for each session. Only the cardholder's **spouse** will be admitted on the coach's IHSAA activity card if the coach has been issued a tournament pass.

Twelve players (fifteen for 5A & 4A) and two managers will also be issued tournament participant passes.

Statisticians, bus drivers, "extra" cheerleaders, and "extra" band members (see below) must purchase tickets unless the school administrator arranges for these people to be admitted by signing for them at the admission gate. The school will be invoiced for extra admissions after the tournament.

Number of Players

5A & 4A participating school may have a maximum of fifteen players in uniform during warm-ups and at the start of competition. 3A, 2A, 1A schools may have a maximum of twelve players in uniform during warm-ups and at the start of competition. If more than the allowed number of players are in uniform at the start of competition, the match shall be forfeited. A maximum of 20 people per school (players, coaches, managers, statisticians and trainers) may be seated on the floor.

Pep Bands, Cheerleaders, Student Cheering Sections

1. Seating - Pep bands and student cheering sections must use the assigned area.
2. Pep Bands - Forty-five-pep band members for each school will be admitted free. Schools may bring more band members, but will be billed for the difference after the tournament. A band director or school official must be present at the time the band is admitted. NOTE: Pep bands may play **only** during games in which their team participates. Pep bands may play before the match, at time outs, and between games. However, PLAYING DURING A LIVE BALL IS PROHIBITED.
   Each pep band is responsible for its own instruments. Facilities for storing instruments ARE NOT AVAILABLE at the tournament site. Please bring instruments ONLY to the game in which your team participates. Drums and other instruments are to be used **only** when the entire pep band plays.
3. Cheerleaders - Twelve cheerleaders in uniform for each school will be admitted free. Schools may bring more cheerleaders, but will be billed for the extra admissions after the tournament.
4. Student Cheering Section - Students must present their activity cards to be admitted for the student price. A special seating area will be reserved for cheering sections. NOTE: So that preparations can be made for seating, please let the tournament manager know a week in advance if your school's pep band or students will attend the tournament.

Crowd Control

Each school is responsible for the conduct of its students and adult fans. IHSAA rules require schools to provide close supervision at all contests and asks for support and cooperation of administrators in enforcing the following rules:

1. No one other than authorized individuals will be allowed on the floor or in restricted areas.
2. Persons who enter the floor or restricted areas will be removed from the premises for the remainder of the tournament.

Sportsmanship Rules

The following sportsmanship rules will be in effect at all IHSAA state play-offs and championship events:

1. Face Painting Full or half face painting is not permitted. Partial face painting is permitted, i.e. small markings on cheeks, nose, forehead.
2. Posters/Banners/Signs All signs must display only positive support for one's own team.
3. Artificial Noisemakers Artificial noisemakers are prohibited.
4. Balloons Balloons are not permitted at any IHSAA state play off or championship event.
5. Attire Bare chests are not permitted. Shirts must be worn.
6. Inappropriate Behavior The following are not permitted:
   a. Throwing objects onto (or entering) the playing area before, during or after a contest.
   b. Verbal harassment or derogatory remarks directed toward an opponent or official.

Official Volleyball

Official Ball: Spalding TF 5000

Official Match and Scoring Rules

All Idaho state volleyball matches will be 3 out of 5 games and follows National Federation rules (1-4) for rally scoring. If match 15 (the "if" match) is played, it will be 2 out of 3 games and will be 25 points with a 30 point cap. The third game will be 15 points with no cap.

Pre-Tournament Practice

Each team will be allowed to practice once at a state tournament site during the week prior to the state tournament, providing arrangements can be made. Practice balls will be provided at the tournament sites. Contact your tournament manager for available practice times.

Warm-up Between Matches
Each tournament site has an area designated for team stretching prior to the start of the pre-match warm-up period. **Teams will not be allowed on the playing court until the clock is started for pre-match warm-ups.** The number of participants at any practice or warm-up shall be limited to the number of participants in uniform (5A/4A: 15; 3A/2A/1A: 12).

There will be a **maximum** of twenty minutes for pre-match warm-up between matches. The timer should start the clock when the referee starts the pre-match conference with the captains from the respective teams. The time schedule for the pre-match warm-up shall consist of the following 2-5-5-3:

a. Two minutes: Coin flip to determine the serving and receiving teams.
b. First 5 minutes: Serving team practices on the full court. Receiving team may practice ball handling outside the playing court.
c. Next 5 minutes: Receiving team practices on the full court. Serving team may practice ball handling outside the playing court.
d. Last 3 minutes: Both teams on the court practice serving over the net and receiving.

The warm-up period may be limited to 2-4-4-2 at the discretion of the tournament manager due to schedule requirements. If this becomes necessary, the periods shall consist of:

a. First 2 minutes: Coin flip to determine serving and receiving teams.
b. First 4 minutes: Serving team practices on the full court. Receiving team may practice ball handling outside the playing court.
c. Next 4 minutes: Receiving team practices on the full court. Serving team may practice ball handling outside the playing court.
d. Last 2 minutes: Both teams on the court practice serving and receiving over the net.

Practice Between Games
Teams are prohibited from using the net for practice between games. The ball may not cross the net. The number of participants at any practice or warm-up shall be limited to the number of participants in uniform (5A/4A: 15; 3A/2A/1A: 12).

Protests
The IHSAA Board of Directors does not recognize protests of sports officials' decisions. Correction of errors is handled in accordance with NFHS rules.

Dressing Rooms
Dressing rooms will be assigned daily, but due to limited space, teams are encouraged to dress in their hotel rooms. Arrangements can be made to lock up valuables. Towels will not be furnished and teams should bring their own towels for use at the bench. Teams are responsible to pick up litter from the floor of the locker room. Facilities are not available for drying or storage.

Training Room / Towels
Training room facilities and a trainer will be available for special assistance or in case of an emergency. However, schools should plan to furnish their own tape and supplies. Towels will not be provided at the tournament.

Awards
Trophies will be awarded to first, second, third, and fourth place teams. Medals will be awarded to members of the Champion and Runner-up teams. The presentation of awards will be as follows: Fourth place and third place trophies will be awarded at the conclusion of those matches. Second place and championship trophies will be presented at the conclusion of the championship game.

National Anthem
The National Anthem will be played Friday morning prior to match 1 and on Saturday morning prior to match 9.

Programs
The composition, printing and selling of programs is the responsibility of the IHSAA. Each team will receive one complimentary souvenir program.

Rosters and Team Pictures
Team rosters may be submitted via our on-line, interactive form at idhsaa.org. Send **pictures** as an attachment to an e-mail message as a high quality TIFF or JPG image to cherylm@idhsaa.org. Do not submit hard copies of rosters or scores. All materials must be received by 4:00 P.M., October 13 to insure placement in the program.

T-Shirts / Souvenir Merchandise
State tournament t-shirts and other souvenir merchandise will be sold at all tournament sites by McU Sports.

Hospitality Room
A room will be available for coaches and officials. However, refreshments will not be provided.

Lost and Found
The lost and found will be located at the tournament manager's office.

Host Hotels / Hotel Conduct
See the inside front cover for the hotels designated as host hotels for the state volleyball tournament. We encourage all schools to take advantage of their special rates. **Conduct:** Each year a few athletes create a bad image for the rest by their uncontrolled behavior in hotels. Coaches should check rooms closely upon arrival and at departure and ensure their athletes are properly supervised.

All-Tournament Teams
The IHSAA is philosophically opposed to all-tournament team selections. It is the right of the Media to conduct polls and establish rankings. However the IHSAA will not participate in such selections nor announce them at the tournament.

MEDIA INFORMATION
Media Credentials
Members of the media should use their own media credentials for admission at each tournament site. For those who do not have such credentials, media passes will be issued upon request to the IHSAA or the tournament manager.

Broadcasting/Web casting
State play-ins or tournament matches shall not be filmed, videotaped or web cast without the written consent of the IHSAA. (Exception: Schools may film or videotape their **own** games for private use.)

OFFICIALS
Assignment
All officials will be provided and assigned by the IHSAA. Each district will have an opportunity to provide an official for each state tournament.

Line Judges
Certified volleyball officials from the host district will be used as line judges whenever possible.

Official Scorer
Official scorers will be provided by the tournament management. The IHSAA will provide official scorebooks, line-up sheets, and team roster sheets.

State Play-in Games

5A Play-in

3E
5-6B
at Burley High School
5:00 p.m.
Sat., Oct. 24, 2009

4A Play-in

3C
6B
at Burley High School
7:00 p.m.
Sat., Oct. 24, 2009

3A Play-ins

3B
4B
at Mountain Home JUNIOR High School
5:00 p.m.
Sat., Oct. 24, 2009

3C
6B
at Declo High School
5:00 p.m.
Sat., Oct. 24, 2009

1A DI Play-ins

1A
2C
at Lakeside High School
5:00 p.m. Pacific
Sat., Oct. 24, 2009
(if Lakeside is the 1A team, game will be played at Lake City H.S.)

3C
4-5-6C
at Declo High School
7:00 p.m.
Sat., Oct. 24, 2009

1A DII Play-in

3B
5-6B
at Jerome High School
5:00 p.m.
Sat., Oct. 24, 2009

Match Times / Pairings

Friday, October 30

Session 1		Session 2	
Match 1	8:30 a.m.	Match 5	3:30 p.m.
Match 2	10:00 a.m.	Match 6	5:15 p.m.
Match 3	11:30 a.m.	Match 7	6:45 p.m.
Match 4	1:00 p.m.	Match 8	8:15 p.m.

Saturday, October 31

Session 3		Session 4	
Match 9	9:00 a.m.	Match 13	4:00 p.m.
Match 10	10:30 a.m.	Match 14	5:30 p.m.
Match 11	12:00 p.m.	Match 15	7:00 p.m.*
Match 12	1:30 p.m.	*(if necessary)	

Tournament Brackets

5A

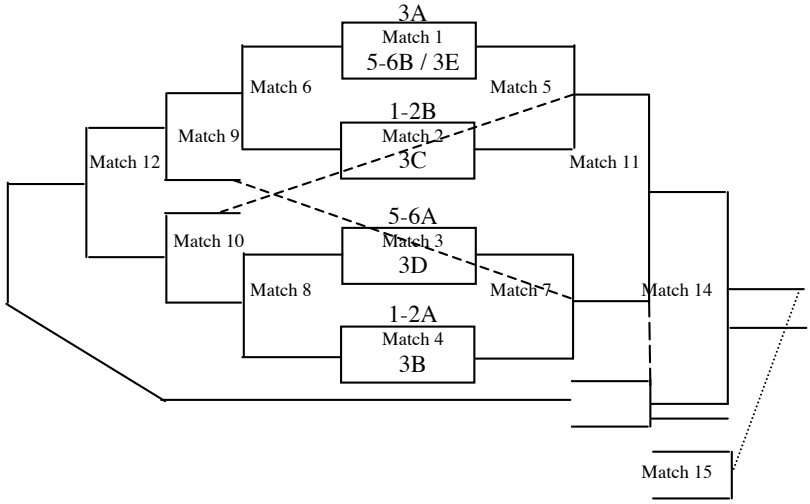

4A

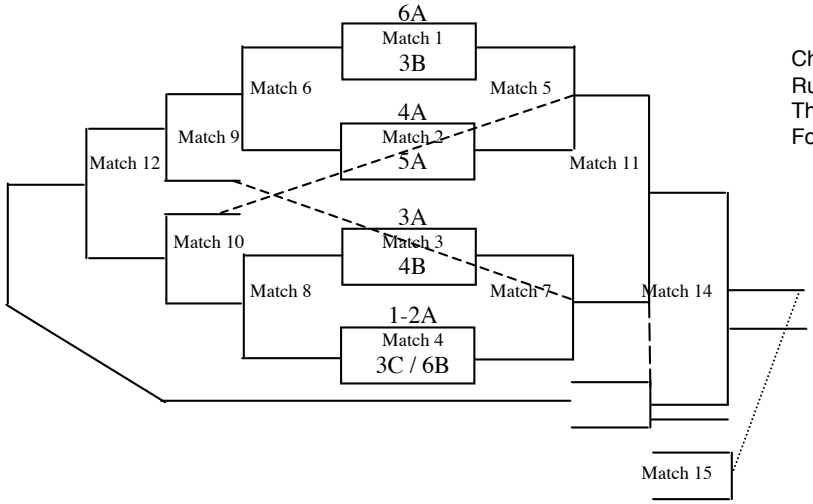

Champion - Winner of match 14 or 15
Runner-up - Loser of match 14 or 15
Third place - Loser of match 13
Fourth place - Loser of match 12

3A

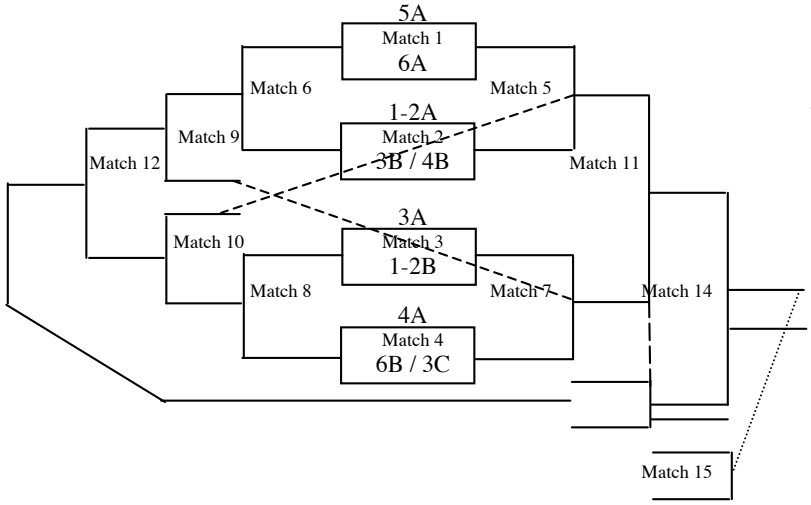

Champion - Winner of match 14 or 15
Runner-up - Loser of match 14 or 15
Third place - Loser of match 13
Fourth place - Loser of match 12

2A

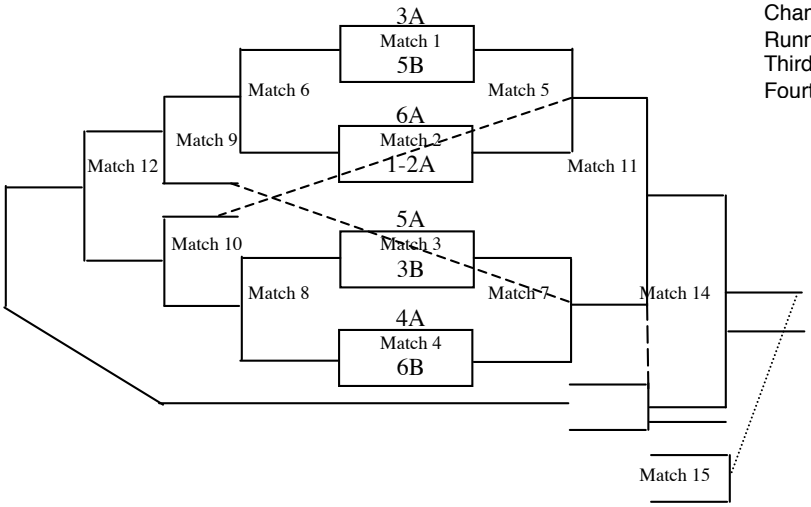

Champion - Winner of match 14 or 15
Runner-up - Loser of match 14 or 15
Third place - Loser of match 13
Fourth place - Loser of match 12

1A DI

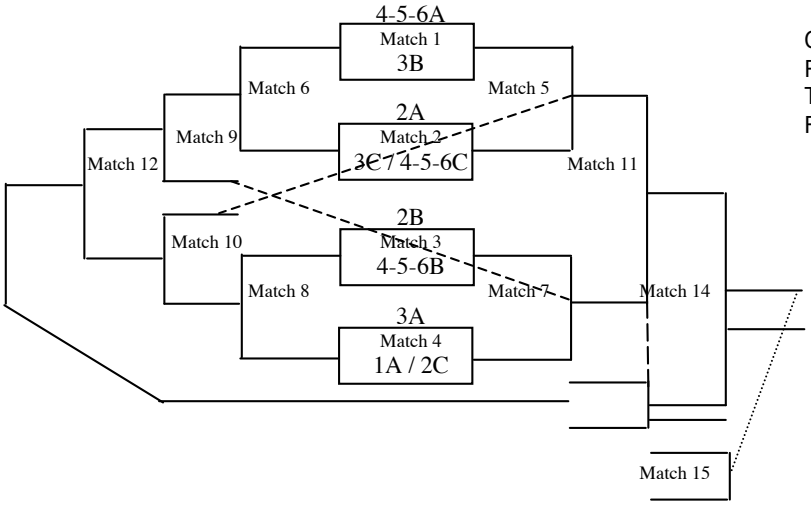

Champion - Winner of match 14 or 15
Runner-up - Loser of match 14 or 15
Third place - Loser of match 13
Fourth place - Loser of match 12

1A DII

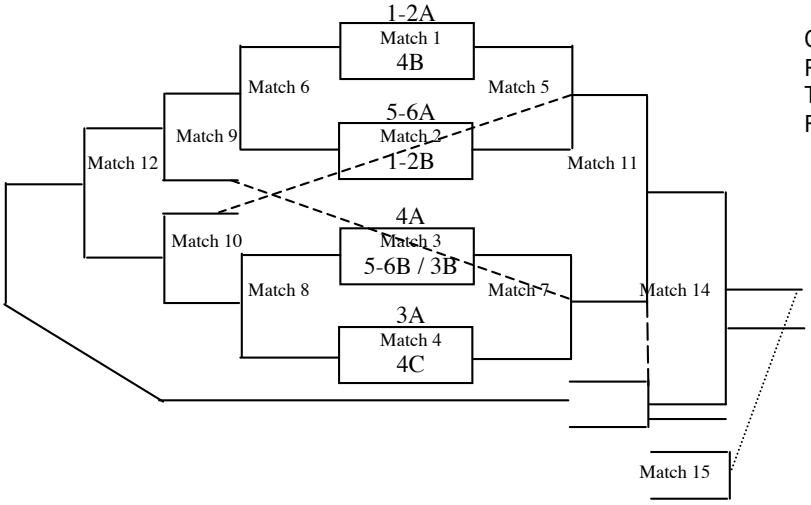

Champion - Winner of match 14 or 15
Runner-up - Loser of match 14 or 15
Third place - Loser of match 13
Fourth place - Loser of match 12

PAST STATE VOLLEYBALL CHAMPIONS

Class A

1976	Snake River	Jan Goodwin
1977	Wood River	David Neumann
1978	Wood River	David Neumann
1979	Skyline	Donna Rosen
1980	Sandpoint	Pam Parks

Class B

1976	McCall-Donnelly	Elise Kraus
1977	Hagerman	Aggie Brailsford
1978	Filer	Julie Astorquia
1979	Gooding	Joleen Toone
1980	Homedale	Sharon Frost

5A

1981	Meridian	Hugo Jacobsmeyer
1982	Sandpoint	Irene Matlock
1983	Sandpoint	Irene Matlock
1984	Sandpoint	Irene Matlock
1985	Sandpoint	Irene Matlock
1986	Sandpoint	Shelly Siefried
1987	Coeur d'Alene	Kent Scanlon
1988	Madison	Bob Boice
1989	Madison	Bob Boice
1990	Pocatello	Alice Hunt
1991	Bonneville	Alane Pierce
1992	Madison	Bob Boice
1993	Centennial	Charlotte O'Dale
1994	Sandpoint	Jeff Hurst
1995	Sandpoint	Jeff Hurst
1996	Bonneville	David Albiston
1997	Highland	Tammy Christian
1998	Bonneville	David Albiston
1999	Sandpoint	Jeff Hurst
2000	Skyline	Tammy Sorensen
2001	Centennial	Ramey Uriarte
2002	Eagle	Paul Schwager
2003	Idaho Falls	Wendy Johnson
2004	Idaho Falls	Wendy Johnson
2005	Idaho Falls	Wendy Johnson
2006	Eagle	Paul Schwager
2007	Eagle	Paul Schwager
2008	Eagle	Paul Schwager

4A

2000	Sandpoint	Jeff Hurst
2001	Bonneville	David Albiston
2002	Sandpoint	Jamie Poncho
2003	Sandpoint	Jamie Poncho
2004	Bonneville	Dave Albiston
2005	Moscow	Aimee Graham
2006	Sandpoint	Karen Alsager
2007	Bonneville	Chanel McMurtrey
2008	Sandpoint	Karen Alsager

3A

1981	Preston	Launa Moser
1982	St. Maries	Mitch Santos
1983	Preston	Launa Moser
1984	St. Maries	Mitch Santos
1985	St. Maries	Mitch Santos
1986	St. Maries	Mitch Santos
1987	St. Maries	Mitch Santos
1988	St. Maries	Mitch Santos
1989	St. Maries	Mitch Santos
1990	St. Maries	Mitch Santos
1991	St. Maries	Mitch Santos
1992	St. Maries	Mitch Santos
1993	St. Maries	Mitch Santos
1994	Preston	Launa Moser
1995	Preston	Launa Moser
1996	Emmett	Karen Alsager
1997	Bear Lake	Laura Cammack
1998	Bear Lake	Laura Cammack
1999	Bear Lake	Laura Cammack
2000	Bear Lake	Laura Cammack
2001	Bear Lake	Laura Cammack
2002	Preston	Launa Moser
2003	Sugar-Salem	Trish Chatterton
2004	Shelley	Krista Pettingill
2005	Middleton	Jan Arrasmith
2006	Sugar-Salem	Trish Chatterton
2007	Sugar-Salem	Trish Chatterton
2008	Sugar-Salem	Trish Chatterton

2A

1981	Gooding	Joleen Toone
1982	Malad	Roslyn Brimhall
1982	Malad	Roslyn Brimhall
1984	Malad	Roslyn Brimhall
1985	Malad	Roslyn Brimhall
1986	Gooding	Joleen Toone
1987	Butte County	Kevan Kernan
1988	Malad	Roslyn Brimhall
1989	Butte County	Kevan Kernan
1990	Sugar-Salem	Bill Koehler
1991	Gooding	Joleen Toone
1992	Gooding	Joleen Toone
1993	Filer	Ed Richards
1994	Wallace	Dick Schreiber
1995	Firth	Randy Cox
1996	Butte County	Dean Goodworth
1997	Filer	Edward Richards
1998	West Side	Chris White
1999	West Side	Chris White
2000	Nampa Christian	Debi Downs
2001	Nampa Christian	Debi Downs
2002	Nampa Christian	Debi Downs
2003	Nampa Christian	Debi Downs
2004	Firth	Terry Wadsworth
2005	Nampa Christian	Larry Downs
2006	Nampa Christian	Debi Downs
2007	Challis	Deb Sheppeard
2008	Parma	Jeana Critchfield

1A

1981	Hagerman	Aggie Brailsford
1982	Cambridge	Jon Hussman
1983	Troy	Lorry Stensland
1984	Ketchum	Nancy Parsons
1985	Clark County	Duke Hammond
1986	Greenleaf	Meredith Beals
1987	Genesee	Tom Patrick
1988	Cambridge	Carol Hill
1989	Dietrich	Denise Dwyer
1990	Shoshone	Larry Messick
1991	Cambridge	Terry Walker
1992	Cambridge	Terry Walker
1993	Shoshone	Larry Messick
1994	Cambridge	Terry Walker
1995	Troy	Bobbi Hazeltine
1996	Troy	Bobbi Hazeltine
1997	Troy	Bobbi Hazeltine
1998	Troy	Bobbi Hazeltine
1999	Troy	Kortnie Mills
2000	Genesee	Dave Neumann
2001	Genesee	Dave Neumann
2002	Troy	Tera Stoner
2003	Troy	Tera Stoner
2004	Shoshone	Larry Messick
2005	Shoshone	Larry Messick
2006	Garden Valley	Paula Tucker-Boyd

1A DI

2008	Horseshoe Bend	Kristen Goff

1A DII

2008	Garden Valley	Paula Tucker